SEDYE ve HASTA YATAĞI İÇİN DUVAR KORUMA BARİYERLERİ
WALL PROTECTION BARRIERS for STRETCHER CARRIAGE and SICKBED

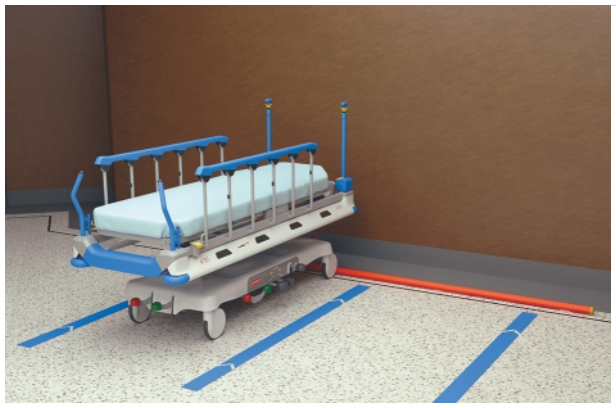

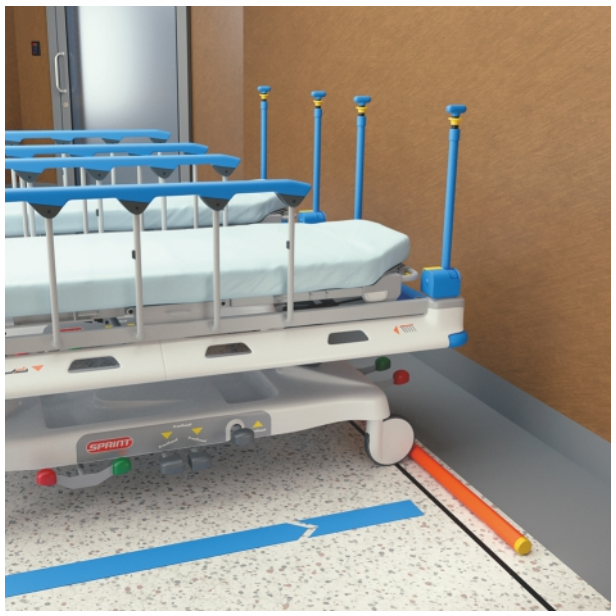

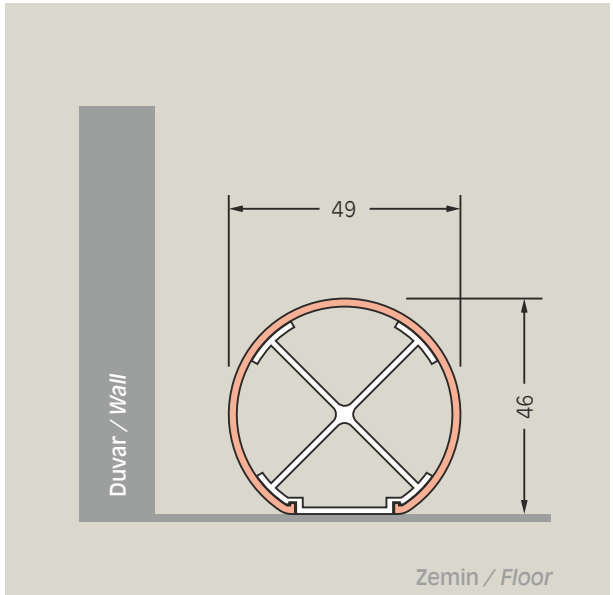

nc49-Z

SEDYE ve HASTA YATAĞI İÇİN DUVAR KORUMA BARİYERLERİ
WALL PROTECTION BARRIERS for STRETCHER CARRIAGE and SICKBED

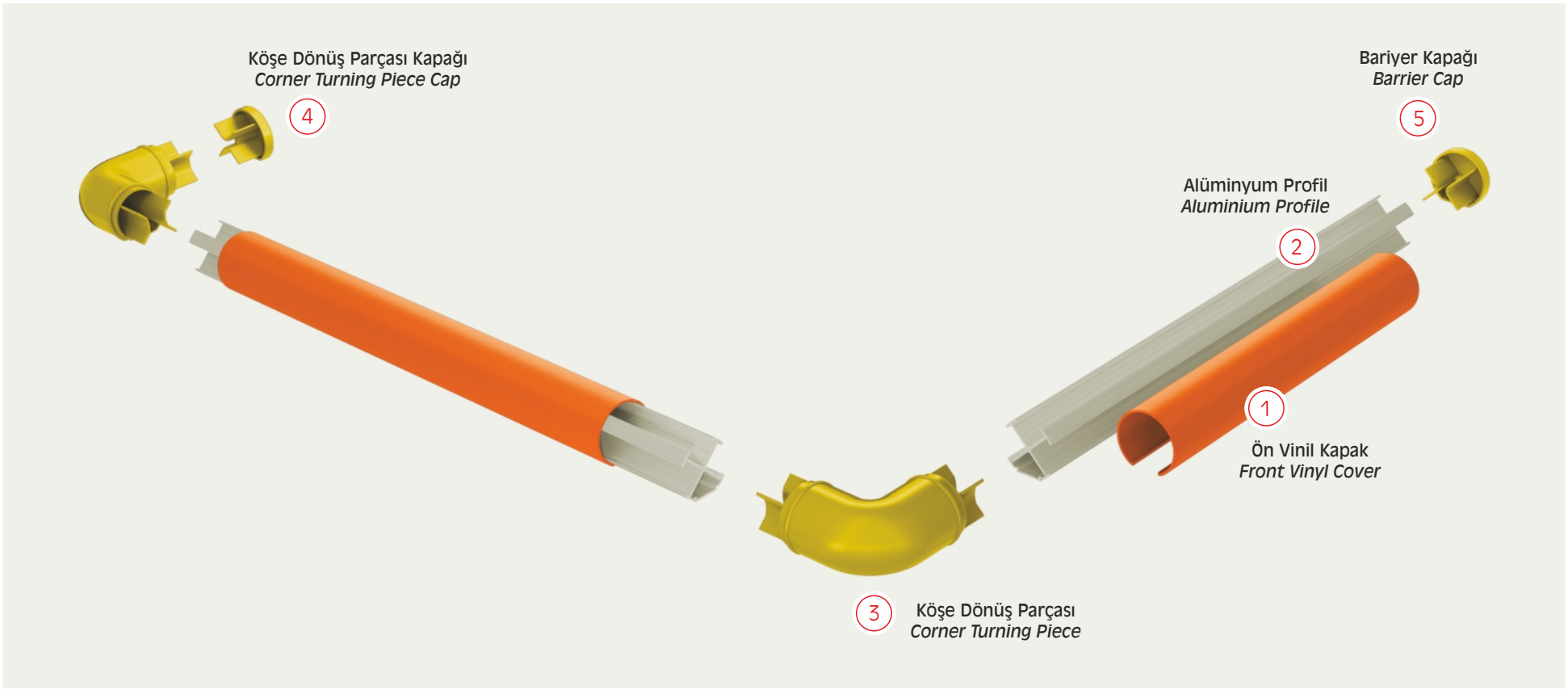
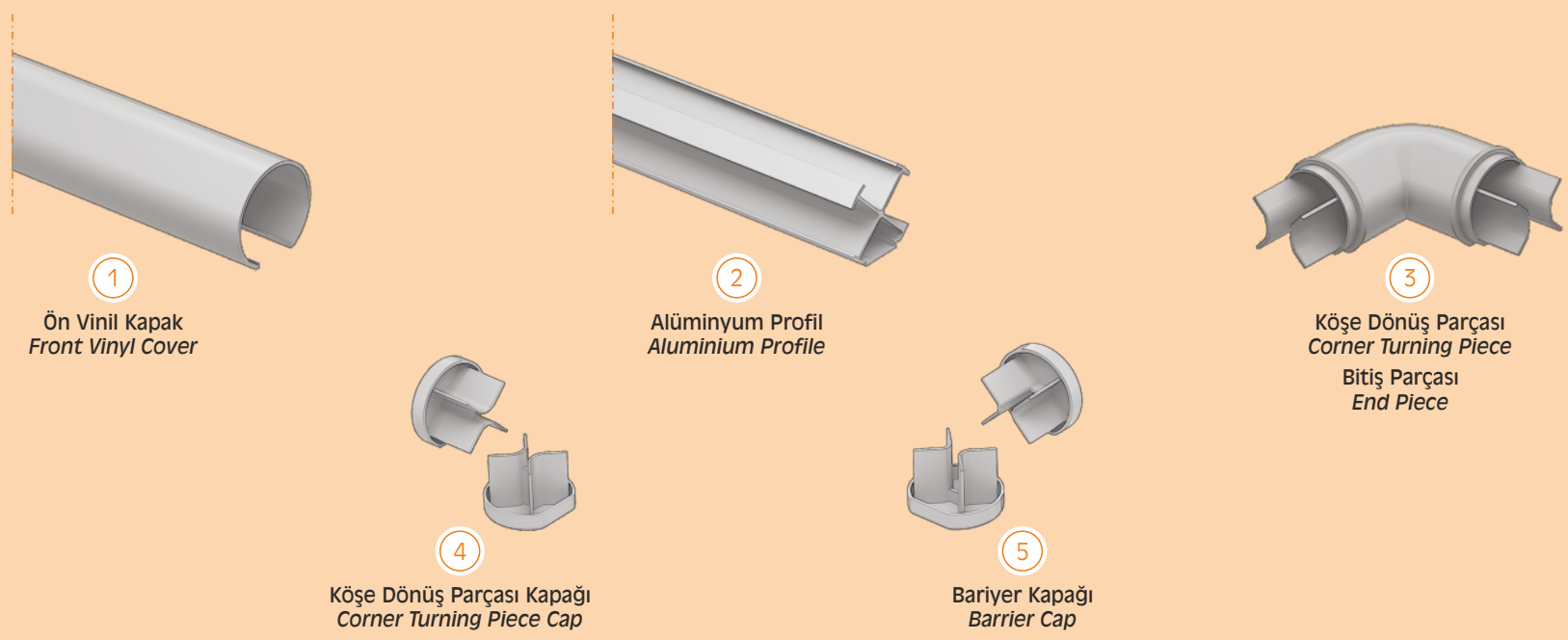
nc49-Z ANA PARÇALAR / *nc49-Z MAIN COMPONENTS*